VL-TNL Tunnel Light

Tunnel light for diffuse illumination of shiny parts, round opening (VL-TNA) or slot (VL-TNL), up to 1000 mm, 24 V DC



FÖGE Elektronik GmbH · Presentstr. 3 · 63939 Wörth am Main · Germany · +49 9372 9809477 · sales@fogegmbh.com

Intended use
Technical information
Dimensions and installation
Electrical connection
Accessories
Faults
Warnings
Safety
Liability for material defects
Decommissioning and disposal

1 Intended use

The VL-TNL / VL-TNA tunnel light is designed for industrial machine vision: diffuse illumination of shiny and textured parts that pass through the tunnel. The camera looks through the opening on top of the tunnel.

The device must be operated only within the limits specified in the technical data and installed according to this manual. The system must be designed so that no person is endangered and machines and other equipment are not damaged in the event of a malfunction or total failure. Take additional precautions where the application is safety-related.

2 Technical information

Light type	Tunnel light for diffuse illumination; built with VL-BAL bar lights inside
Versions	VL-TNA with round camera opening · VL-TNL with camera slot
Sizes (A × B)	VL-TNA and VL-TNL 200 – 400 × 250 / 500 / 750 / 1000 mm
Colours and wavelength	Red 625 nm · White 6500 K
Infrared and UV	IR 850 nm and UV 365 nm on request
Light angle	120°
Supply voltage	24 V DC

Power consumption	13 – 80 W depending on size and colour (see model table)
Electrical connection	As VL-BAL: M12 connector on the internal VL-BAL bar light, PNP or NPN trigger
Degree of protection	IP50 (IP67 on request)
Housing	Aluminium, black anodised, and steel, white painted
EMC	2014/30/EU — EMC Directive (EN IEC 55015:2019+A11:2020, IEC 61547:2020)

Model	Version	Colour	Wavelength / colour temperature	Power	A × B	C	D	E
VL-TNA-200-250-R-24-C30	Round opening	Red	625 nm	13 W	200 × 250 mm	320 mm	307 mm	147 mm
VL-TNA-200-250-W-24-C30	Round opening	White	6500 K	20 W	200 × 250 mm	320 mm	307 mm	147 mm
VL-TNA-200-500-R-24-C30	Round opening	Red	625 nm	26 W	200 × 500 mm	320 mm	557 mm	147 mm
VL-TNA-200-500-W-24-C30	Round opening	White	6500 K	40 W	200 × 500 mm	320 mm	557 mm	147 mm
VL-TNA-200-750-R-24-C30	Round opening	Red	625 nm	39 W	200 × 750 mm	320 mm	807 mm	147 mm
VL-TNA-200-750-W-24-C30	Round opening	White	6500 K	60 W	200 × 750 mm	320 mm	807 mm	147 mm
VL-TNA-200-1000-R-24-C30	Round opening	Red	625 nm	52 W	200 × 1000 mm	320 mm	1057 mm	147 mm
VL-TNA-200-1000-W-24-C30	Round opening	White	6500 K	80 W	200 × 1000 mm	320 mm	1057 mm	147 mm
VL-TNA-300-250-R-24-C30	Round opening	Red	625 nm	13 W	300 × 250 mm	420 mm	307 mm	197 mm
VL-TNA-300-250-W-24-C30	Round opening	White	6500 K	20 W	300 × 250 mm	420 mm	307 mm	197 mm
VL-TNA-300-500-R-24-C30	Round opening	Red	625 nm	26 W	300 × 500 mm	420 mm	557 mm	197 mm
VL-TNA-300-500-W-24-C30	Round opening	White	6500 K	40 W	300 × 500 mm	420 mm	557 mm	197 mm
VL-TNA-300-750-R-24-C30	Round opening	Red	625 nm	39 W	300 × 750 mm	420 mm	807 mm	197 mm
VL-TNA-300-750-W-24-C30	Round opening	White	6500 K	60 W	300 × 750 mm	420 mm	807 mm	197 mm
VL-TNA-300-1000-R-24-C30	Round opening	Red	625 nm	52 W	300 × 1000 mm	420 mm	1057 mm	197 mm
VL-TNA-300-1000-W-24-C30	Round opening	White	6500 K	80 W	300 × 1000 mm	420 mm	1057 mm	197 mm
VL-TNA-400-250-R-24-C30	Round opening	Red	625 nm	13 W	400 × 250 mm	520 mm	307 mm	247 mm
VL-TNA-400-250-W-24-C30	Round opening	White	6500 K	20 W	400 × 250 mm	520 mm	307 mm	247 mm
VL-TNA-400-500-R-24-C30	Round opening	Red	625 nm	26 W	400 × 500 mm	520 mm	557 mm	247 mm
VL-TNA-400-500-W-24-C30	Round opening	White	6500 K	40 W	400 × 500 mm	520 mm	557 mm	247 mm
VL-TNA-400-750-R-24-C30	Round opening	Red	625 nm	39 W	400 × 750 mm	520 mm	807 mm	247 mm
VL-TNA-400-750-W-24-C30	Round opening	White	6500 K	60 W	400 × 750 mm	520 mm	807 mm	247 mm
VL-TNA-400-1000-R-24-C30	Round opening	Red	625 nm	52 W	400 × 1000 mm	520 mm	1057 mm	247 mm
VL-TNA-400-1000-W-24-C30	Round opening	White	6500 K	80 W	400 × 1000 mm	520 mm	1057 mm	247 mm
VL-TNL-200-250-R-24-C30	Slot	Red	625 nm	13 W	200 × 250 mm	320 mm	307 mm	147 mm
VL-TNL-200-250-W-24-C30	Slot	White	6500 K	20 W	200 × 250 mm	320 mm	307 mm	147 mm
VL-TNL-200-500-R-24-C30	Slot	Red	625 nm	26 W	200 × 500 mm	320 mm	557 mm	147 mm
VL-TNL-200-500-W-24-C30	Slot	White	6500 K	40 W	200 × 500 mm	320 mm	557 mm	147 mm
VL-TNL-200-750-R-24-C30	Slot	Red	625 nm	39 W	200 × 750 mm	320 mm	807 mm	147 mm
VL-TNL-200-750-W-24-C30	Slot	White	6500 K	60 W	200 × 750 mm	320 mm	807 mm	147 mm
VL-TNL-200-1000-R-24-C30	Slot	Red	625 nm	52 W	200 × 1000 mm	320 mm	1057 mm	147 mm
VL-TNL-200-1000-W-24-C30	Slot	White	6500 K	80 W	200 × 1000 mm	320 mm	1057 mm	147 mm
VL-TNL-300-250-R-24-C30	Slot	Red	625 nm	13 W	300 × 250 mm	420 mm	307 mm	197 mm
VL-TNL-300-250-W-24-C30	Slot	White	6500 K	20 W	300 × 250 mm	420 mm	307 mm	197 mm
VL-TNL-300-500-R-24-C30	Slot	Red	625 nm	26 W	300 × 500 mm	420 mm	557 mm	197 mm
VL-TNL-300-500-W-24-C30	Slot	White	6500 K	40 W	300 × 500 mm	420 mm	557 mm	197 mm
VL-TNL-300-750-R-24-C30	Slot	Red	625 nm	39 W	300 × 750 mm	420 mm	807 mm	197 mm

Model	Version	Colour	Wavelength / colour temperature	Power	A × B	C	D	E
VL-TNL-300-750-W-24-C30	Slot	White	6500 K	60 W	300 × 750 mm	420 mm	807 mm	197 mm
VL-TNL-300-1000-R-24-C30	Slot	Red	625 nm	52 W	300 × 1000 mm	420 mm	1057 mm	197 mm
VL-TNL-300-1000-W-24-C30	Slot	White	6500 K	80 W	300 × 1000 mm	420 mm	1057 mm	197 mm
VL-TNL-400-250-R-24-C30	Slot	Red	625 nm	13 W	400 × 250 mm	520 mm	307 mm	247 mm
VL-TNL-400-250-W-24-C30	Slot	White	6500 K	20 W	400 × 250 mm	520 mm	307 mm	247 mm
VL-TNL-400-500-R-24-C30	Slot	Red	625 nm	26 W	400 × 500 mm	520 mm	557 mm	247 mm
VL-TNL-400-500-W-24-C30	Slot	White	6500 K	40 W	400 × 500 mm	520 mm	557 mm	247 mm
VL-TNL-400-750-R-24-C30	Slot	Red	625 nm	39 W	400 × 750 mm	520 mm	807 mm	247 mm
VL-TNL-400-750-W-24-C30	Slot	White	6500 K	60 W	400 × 750 mm	520 mm	807 mm	247 mm
VL-TNL-400-1000-R-24-C30	Slot	Red	625 nm	52 W	400 × 1000 mm	520 mm	1057 mm	247 mm
VL-TNL-400-1000-W-24-C30	Slot	White	6500 K	80 W	400 × 1000 mm	520 mm	1057 mm	247 mm

All models: 24 V DC, IP50 (IP67 on request); electrical connection as VL-BAL. IR (850 nm) and UV (365 nm) versions on request.

3 Dimensions and installation

Operating the system requires knowledge of the assembly instructions. The signal words used are explained in the section Safety.

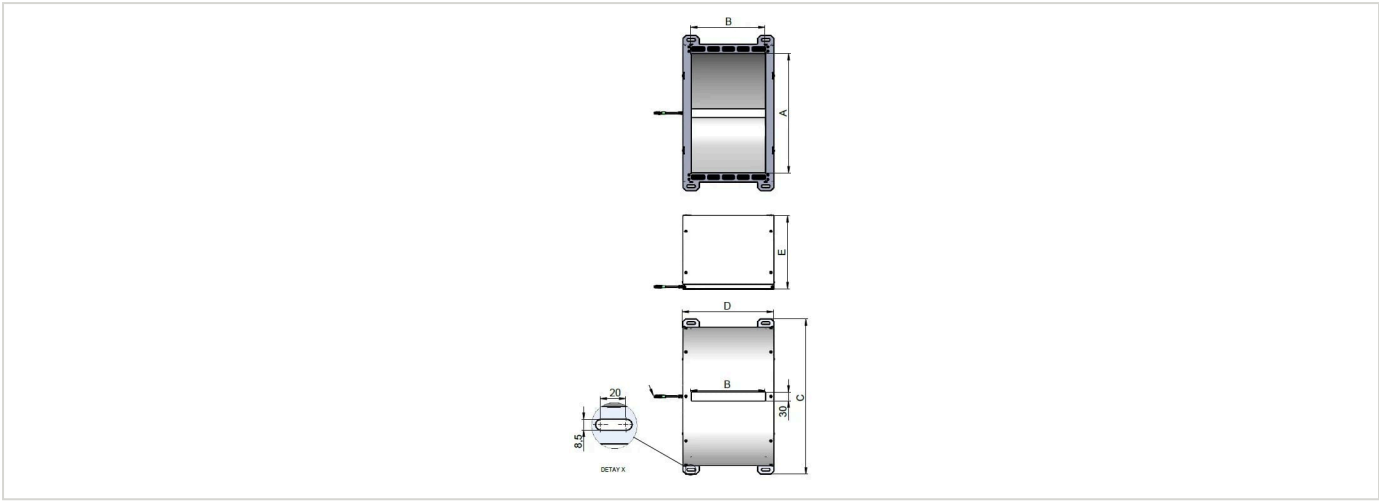

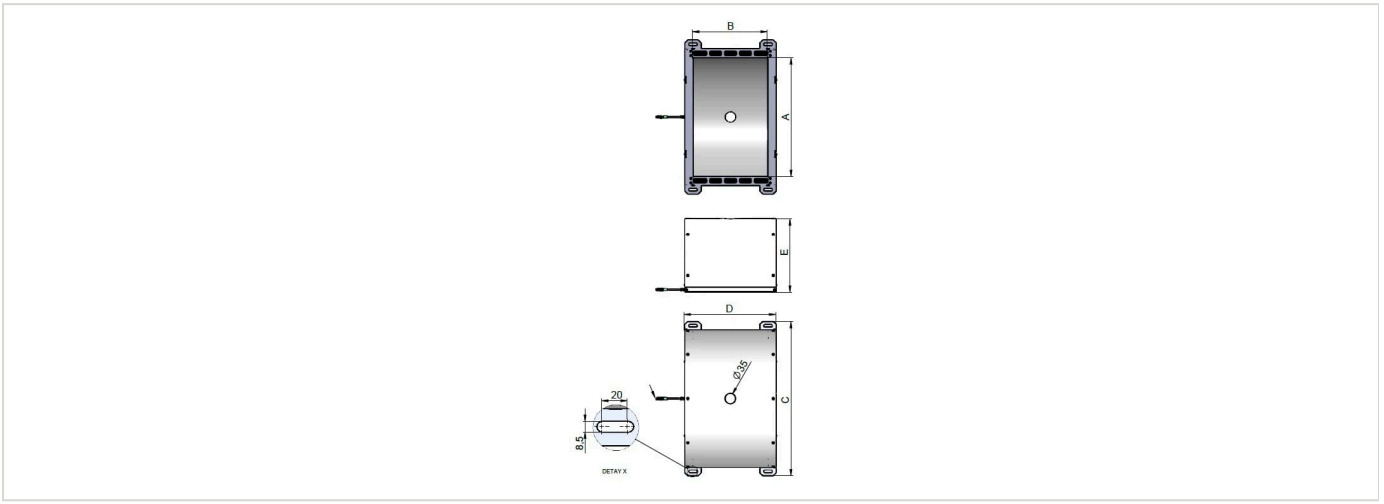

4 Electrical connection

The tunnel light is connected through the M12 connector of the VL-BAL bar light built into it; wiring and trigger as VL-BAL.

Pin	Function	Wire colour
1	Power in +24 V DC	Brown
2	NPN trigger	White
3	GND	Blue
4	PNP trigger	Black
5	Not connected	—

Apply either the PNP or the NPN trigger signal, not both. Without the correct input current the light output is not consistent. Pin 5 is not used.

5 Accessories

Ordering code	Description	Suitable for
VKPM-Z-5/4	M12 female connector, straight, 4-pin, PVC cable 4 × 0.34 mm², 5 m, open end, IP67	All VL-TNL / VL-TNA models

6 Faults

- Do not open the product in any of the cases below or in any other case.
- If the LEDs do not light up, check the connection and the power supply.
- If the LEDs still do not light up, contact FÖGE or your distributor.

7 Warnings

- Connect the power supply and the display/output device according to the safety regulations for electrical equipment.
- The supply voltage must not exceed the specified limits.
- Avoid shocks and impacts to the device.
- Protect the cable against damage.

Possible consequences of non-observance: risk of injury by electric shock; damage to or destruction of the device.

8 Safety

Operating the system requires knowledge of the assembly instructions. The following signal words are used in these instructions:

Signal word	Meaning
WARNING	Indicates a hazardous situation which, if not avoided, could result in death or serious injury.
NOTICE	Indicates a situation that may result in property damage if not avoided.
ELECTRIC SHOCK	Indicates a risk of electric shock if the instructions are not followed.

9 Liability for material defects

All components of the device have been checked and tested for functionality at the production facility. If defects occur despite our careful quality control, FÖGE or your dealer must be notified immediately.

The liability for material defects is 12 months from delivery. Within this period, defective parts, except wearing parts, are repaired or replaced free of charge if the device is returned to FÖGE with shipping costs prepaid. Damage caused by improper handling, the use of force, or repairs or modifications by third parties is not covered. Repairs are carried out exclusively by FÖGE.

Further claims cannot be made. Claims arising from the purchase contract remain unaffected. In particular, FÖGE shall not be liable for any consequential, special, indirect or incidental damage. In the interest of further development, FÖGE reserves the right to make design changes without notice.

10 Decommissioning and disposal

Disconnect the power supply and the output cable from the device.

Incorrect disposal may harm the environment. Dispose of the device, its components and accessories, and the packaging materials in compliance with the waste treatment and disposal regulations applicable in the country and region of use.