VL-RGF Direct Ring Light

Direct LED ring light, 3 sizes, red, green, blue or white, 24 V DC with PNP / NPN trigger



FÖGE Elektronik GmbH · Presentstr. 3 · 63939 Wörth am Main · Germany · +49 9372 9809477 · sales@fogegmbh.com

Intended use
Technical information
Dimensions and installation
Electrical connection
Accessories
Faults
Warnings
Safety
Liability for material defects
Decommissioning and disposal

1 Intended use

The VL-RGF direct ring light is designed for industrial machine vision: part inspection, code reading, OCR and defect detection. The light is mounted around the camera lens and illuminates the part directly.

The device must be operated only within the limits specified in the technical data and installed according to this manual. The system must be designed so that no person is endangered and machines and other equipment are not damaged in the event of a malfunction or total failure. Take additional precautions where the application is safety-related.

2 Technical information

Light type	Direct LED ring light
Sizes	51-30, 70-38, 100-45 (see model table)
Colours and wavelength	Red 621 nm · Green 528 nm · Blue 470 nm · White 6500 K
Infrared and UV	IR 850 nm and UV 365 nm on request
LED beam angle	Red 32° · Green 34° · Blue 34° · White 30°
LEDs	Automotive-grade LEDs, constant-current drive
Supply voltage	24 V DC

Power consumption	1.7 – 12 W depending on size and colour (see model table)
Trigger input	PNP or NPN — apply one signal, not both
Connection	M8 4-pin connector on a 300 mm cable
Degree of protection	IP50 (IP67 on request)
Housing	Aluminium, black anodised, with cooling grooves
Mounting	4 × M3 mounting holes
EMC	2014/30/EU — EMC Directive (EN IEC 55015:2019+A11:2020, IEC 61547:2020)

Model	Colour	Wavelength / colour temperature	Power	A	B	C
VL-RGF-51-30-R-24-C30	Red	621 nm	1.7 W	56.5 mm	26.5 mm	19 mm
VL-RGF-51-30-G-24-C30	Green	528 nm	2.7 W	56.5 mm	26.5 mm	19 mm
VL-RGF-51-30-B-24-C30	Blue	470 nm	2.7 W	56.5 mm	26.5 mm	19 mm
VL-RGF-51-30-W-24-C30	White	6500 K	2.7 W	56.5 mm	26.5 mm	19 mm
VL-RGF-70-38-R-24-C30	Red	621 nm	3.4 W	75 mm	34.5 mm	19 mm
VL-RGF-70-38-G-24-C30	Green	528 nm	5 W	75 mm	34.5 mm	19 mm
VL-RGF-70-38-B-24-C30	Blue	470 nm	5 W	75 mm	34.5 mm	19 mm
VL-RGF-70-38-W-24-C30	White	6500 K	5 W	75 mm	34.5 mm	19 mm
VL-RGF-100-45-R-24-C30	Red	621 nm	8 W	105.5 mm	41 mm	19 mm
VL-RGF-100-45-G-24-C30	Green	528 nm	12 W	105.5 mm	41 mm	19 mm
VL-RGF-100-45-B-24-C30	Blue	470 nm	12 W	105.5 mm	41 mm	19 mm
VL-RGF-100-45-W-24-C30	White	6500 K	12 W	105.5 mm	41 mm	19 mm

All models: 24 V DC, M8 4-pin connector on a 300 mm cable, IP50 (IP67 on request). IR (850 nm) and UV (365 nm) versions on request.

3 Dimensions and installation

Operating the system requires knowledge of the assembly instructions. The signal words used are explained in the section Safety.



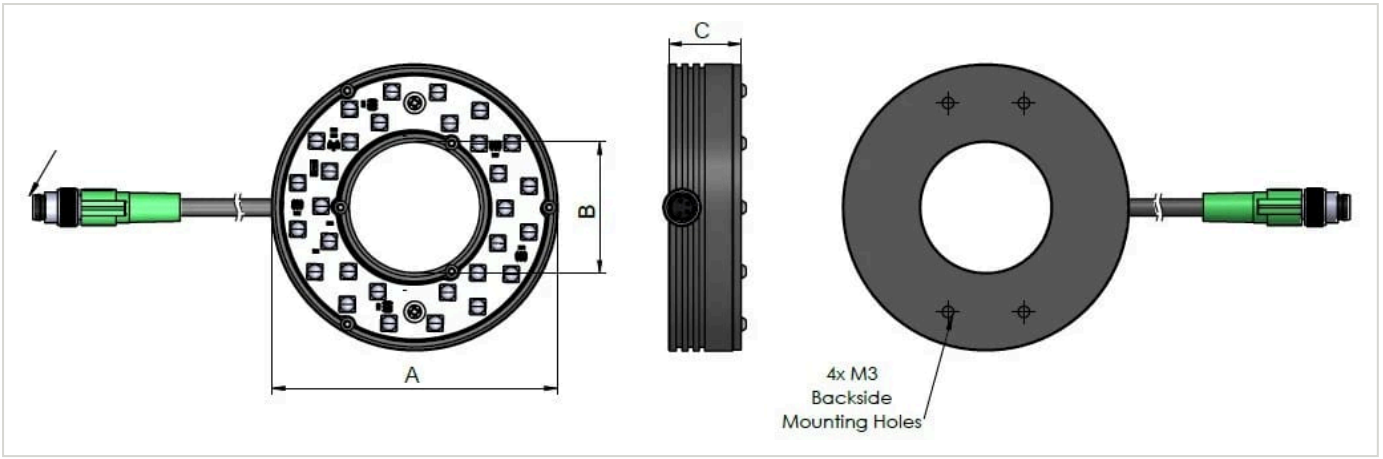

4 Electrical connection

M8 4-pin connector on a 300 mm cable. The light is switched by a PNP or an NPN trigger signal.

Pin	Function	Wire colour
1	Power in +24 V DC	Brown
2	NPN trigger	White
3	GND	Blue
4	PNP trigger	Black

Apply either the PNP or the NPN trigger signal, not both. Without the correct input current the light output is not consistent.

5 Accessories

Ordering code	Description	Suitable for
TKPM-Z-2.5/4	M8 female connector, straight, PVC cable 4 × 0.25 mm², black, UL/CSA, 2.5 m	All VL-RGF models
TKPM-Z-5/4	M8 female connector, straight, PVC cable 4 × 0.25 mm², black, UL/CSA, 5 m	All VL-RGF models
TKPM-W-2.5/4	M8 female connector, 90°, PVC cable 4 × 0.25 mm², black, UL/CSA, 2.5 m	All VL-RGF models
TKPM-W-5/4	M8 female connector, 90°, PVC cable 4 × 0.25 mm², black, UL/CSA, 5 m	All VL-RGF models

6 Faults

- Do not open the product in any of the cases below or in any other case.
- If the LEDs do not light up, check the connection and the power supply.
- If the LEDs still do not light up, contact FÖGE or your distributor.

7 Warnings

- Connect the power supply and the display/output device according to the safety regulations for electrical equipment.
- The supply voltage must not exceed the specified limits.
- Avoid shocks and impacts to the device.
- Protect the cable against damage.

Possible consequences of non-observance: risk of injury by electric shock; damage to or destruction of the device.

8 Safety

Operating the system requires knowledge of the assembly instructions. The following signal words are used in these instructions:

Signal word	Meaning
WARNING	Indicates a hazardous situation which, if not avoided, could result in death or serious injury.
NOTICE	Indicates a situation that may result in property damage if not avoided.
ELECTRIC SHOCK	Indicates a risk of electric shock if the instructions are not followed.

9 Liability for material defects

All components of the device have been checked and tested for functionality at the production facility. If defects occur despite our careful quality control, FÖGE or your dealer must be notified immediately.

The liability for material defects is 12 months from delivery. Within this period, defective parts, except wearing parts, are repaired or replaced free of charge if the device is returned to FÖGE with shipping costs prepaid. Damage caused by improper handling, the use of force, or repairs or modifications by third parties is not covered. Repairs are carried out exclusively by FÖGE.

Further claims cannot be made. Claims arising from the purchase contract remain unaffected. In particular, FÖGE shall not be liable for any consequential, special, indirect or incidental damage. In the interest of further development, FÖGE reserves the right to make design changes without notice.

10 Decommissioning and disposal

Disconnect the power supply and the output cable from the device.

Incorrect disposal may harm the environment. Dispose of the device, its components and accessories, and the packaging materials in compliance with the waste treatment and disposal regulations applicable in the country and region of use.