VL-FLD Large Area Flat Dome Light

White flat dome light with camera hole, 300 × 300 to 1000 × 1000 mm, 24 V DC

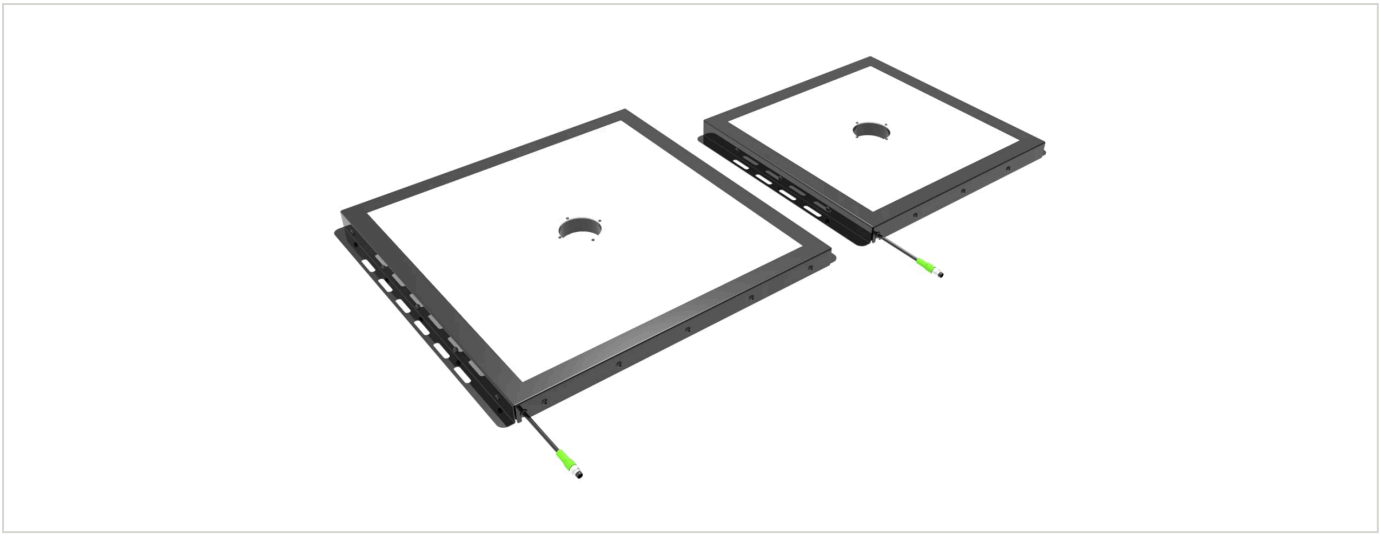

FÖGE Elektronik GmbH · Presentstr. 3 · 63939 Wörth am Main · Germany · +49 9372 9809477 · sales@fogegmbh.com

Intended use
Technical information
Dimensions and installation
Electrical connection
Accessories
Faults
Warnings
Safety
Liability for material defects
Decommissioning and disposal

1 Intended use

The VL-FLD flat dome light is designed for industrial machine vision: diffuse illumination of large areas. The light is positioned above the part; the camera looks through the hole in the centre of the light.

The device must be operated only within the limits specified in the technical data and installed according to this manual. The system must be designed so that no person is endangered and machines and other equipment are not damaged in the event of a malfunction or total failure. Take additional precautions where the application is safety-related.

2 Technical information

Light type	Large-area flat dome light with camera hole
Sizes (A × B)	300 × 300 to 1000 × 1000 mm in 100 mm steps
Camera hole	Ø 55 mm (300 and 400 mm) · Ø 78 mm (500 to 1000 mm); position and design on request
Colour	White 6500 K
Infrared and UV	IR 850 nm and UV 365 nm on request
Light angle	180°

Supply voltage	24 V DC
Power consumption	24 – 100 W depending on size (see model table)
Trigger input	None — the light is switched with the supply voltage
Connection	M8 4-pin connector on a 300 mm cable
Degree of protection	IP50 (IP67 on request)
Housing	Steel, black painted
Diffuser	Polycarbonate with high light transmission
Thickness (E)	21 mm
EMC	2014/30/EU — EMC Directive (EN IEC 55015:2019+A11:2020, IEC 61547:2020)

Model	Colour	Size A × B	Outer dimensions C × D	Camera hole	Power
VL-FLD-300-300-W-24-C30	White 6500 K	300 × 300 mm	352 × 385 mm	Ø 55 mm	24 W
VL-FLD-400-400-W-24-C30	White 6500 K	400 × 400 mm	452 × 485 mm	Ø 55 mm	34 W
VL-FLD-500-500-W-24-C30	White 6500 K	500 × 500 mm	552 × 585 mm	Ø 78 mm	43 W
VL-FLD-600-600-W-24-C30	White 6500 K	600 × 600 mm	652 × 685 mm	Ø 78 mm	50 W
VL-FLD-700-700-W-24-C30	White 6500 K	700 × 700 mm	752 × 785 mm	Ø 78 mm	70 W
VL-FLD-800-800-W-24-C30	White 6500 K	800 × 800 mm	852 × 885 mm	Ø 78 mm	80 W
VL-FLD-900-900-W-24-C30	White 6500 K	900 × 900 mm	952 × 985 mm	Ø 78 mm	90 W
VL-FLD-1000-1000-W-24-C30	White 6500 K	1000 × 1000 mm	1052 × 1085 mm	Ø 78 mm	100 W

All models: 24 V DC, M8 4-pin connector on a 300 mm cable, IP50 (IP67 on request), 21 mm thick. Hole position and design on request. IR (850 nm) and UV (365 nm) versions on request.

3 Dimensions and installation

Operating the system requires knowledge of the assembly instructions. The signal words used are explained in the section Safety.

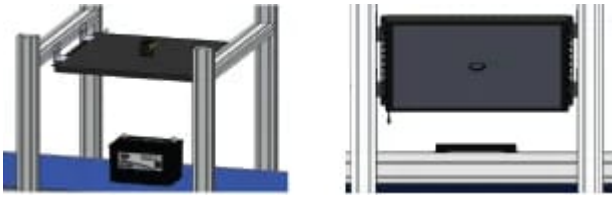

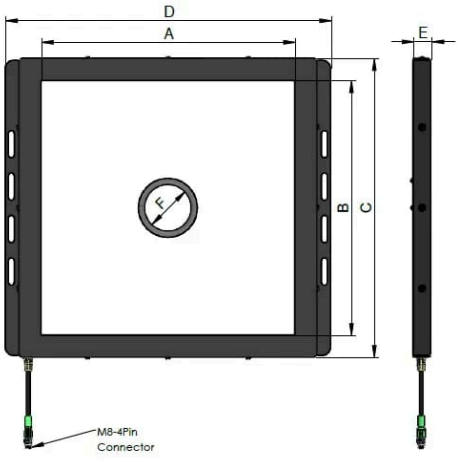

4 Electrical connection

M8 4-pin connector on a 300 mm cable. Only pins 1 (+24 V DC) and 3 (GND) are used.

Pin	Function	Wire colour
1	Power in +24 V DC	Brown
2	Not connected	White
3	GND	Blue
4	Not connected	Black

The light has no trigger input; it is switched on with the 24 V DC supply.

5 Accessories

Ordering code	Description	Suitable for
TKPM-Z-5/4	M8 female connector, straight, 4-pin, PVC cable 4 × 0.25 mm², 5 m, open end, IP67	All VL-FLD models

6 Faults

- Do not open the product in any of the cases below or in any other case.
- If the LEDs do not light up, check the connection and the power supply.
- If the LEDs still do not light up, contact FÖGE or your distributor.

7 Warnings

- Connect the power supply and the display/output device according to the safety regulations for electrical equipment.
- The supply voltage must not exceed the specified limits.
- Avoid shocks and impacts to the device.
- Protect the cable against damage.

Possible consequences of non-observance: risk of injury by electric shock; damage to or destruction of the device.

8 Safety

Operating the system requires knowledge of the assembly instructions. The following signal words are used in these instructions:

Signal word	Meaning
WARNING	Indicates a hazardous situation which, if not avoided, could result in death or serious injury.
NOTICE	Indicates a situation that may result in property damage if not avoided.
ELECTRIC SHOCK	Indicates a risk of electric shock if the instructions are not followed.

9 Liability for material defects

All components of the device have been checked and tested for functionality at the production facility. If defects occur despite our careful quality control, FÖGE or your dealer must be notified immediately.

The liability for material defects is 12 months from delivery. Within this period, defective parts, except wearing parts, are repaired or replaced free of charge if the device is returned to FÖGE with shipping costs prepaid. Damage caused by improper handling, the use of force, or repairs or modifications by third parties is not covered. Repairs are carried out exclusively by FÖGE.

Further claims cannot be made. Claims arising from the purchase contract remain unaffected. In particular, FÖGE shall not be liable for any consequential, special, indirect or incidental damage. In the interest of further development, FÖGE reserves the right to make design changes without notice.

10 Decommissioning and disposal

Disconnect the power supply and the output cable from the device.

Incorrect disposal may harm the environment. Dispose of the device, its components and accessories, and the packaging materials in compliance with the waste treatment and disposal regulations applicable in the country and region of use.